Award Number G09AC00469

John E. Ebel
Weston Observatory
Department of Earth and Environmental Sciences
Boston College
Weston, MA 02493
(617) 552-8300
Fax: (617) 552-8388
ebel@bc.edu

Award Title: NEW ENGLAND SEISMIC NETWORK VAULT CONSTRUCTION AND EARTHQUAKE MONITORING

Final Report

Submitted
December, 2011

"Research supported by the U.S. Geological Survey (USGS), Department of the Interior, under USGS award number G09AC00469. The views and conclusions contained in this document are those of the authors and should not be interpreted as necessarily representing the official policies, either expressed or implied, of the U.S. government."

NEW ENGLAND SEISMIC NETWORK VAULT CONSTRUCTION AND EARTHQUAKE MONITORING

Award Number G09AC00469

John E. Ebel
Weston Observatory
Department of Earth and Environmental Sciences
Boston College
Weston, MA 02493
(617) 552-8300
Fax: (617) 552-8388
ebel@bc.edu

Abstract

The Weston Observatory (WO) of Boston College has primary responsibility for earthquake monitoring and reporting in New England. Weston Observatory operates the New England Seismic Network (NESN), which consists of 17 seismic stations distributed throughout the New England region. In addition to these stations, Weston Observatory receives real-time data from many stations of surrounding seismic networks: the United States National Seismic Network (USNSN), the Canadian Geologic Survey Network (GSC), and the cooperative seismic network of the Lamont-Doherty Earth Observatory (LDEO). The work carried out on this project allowed Weston Observatory to construct new seismic vaults at 6 NESN stations (PQI, EMMW, FFD, VT1, QUA2, and WSPT) and to replace the old seismic station equipment with new seismometers, accelerometers, and dataloggers at these 6 sites as well as at 6 other NESN stations (WVL, HNH, WES, BCX, BRYW and TRY). The new seismic vaults have reduced seismic noise, especially reduced noise transients, compared to the old seismic station locations where the seismometers had been place in the basements of buildings. The new seismometers and dataloggers upgraded the system performance (better station frequency response with less instrument self-noise) over the older equipment that was replaced. The new accelerometers installed at the sites guarantee on-scale recordings of the strong ground motions from all earthquakes. Strong-motion recordings of the 23 August 2011 M 5.8 Mineral, VA earthquake were obtained from a number of the new strong-motion stations. The strong-motion data are necessary for determining improved ground-motion attenuation relations for the region and for quantifying the excitation of near-source strong ground motions for local earthquakes. At the end of the project, the new seismic stations were all fully operational and providing data for routine analysis. In addition to the new equipment at the seismic stations, several new compjter servers were installed at Weston Observatory for the AQMS software for data analysis and database management. This new station analysis equipment makes the Weston Observatory data management center fully compatible with that at LDEO and other ANSS regional networks.

Introduction

The Weston Observatory (WO) of Boston College has primary responsibility for earthquake monitoring and reporting in New England. WO operates the New England Seismic Network (NESN) with support from the United States Geological Survey (USGS). The NESN currently comprises 17 seismic stations distributed throughout the New England region. In addition to these stations, WO receives real-time data from many stations of surrounding seismic networks: the United States National Seismic Network (USNSN), the Canadian Geologic Survey Network (GSC), and the cooperative seismic network of the Lamont-Doherty Earth Observatory (LDEO) (Figure 1). Before this present project began the majority of the NESN stations were located in the basements of university buildings rather than in dedicated, outdoor, stand-alone vaults as general seismological best practices dictate. The decision to put the NESN stations at these sites was made a number of years ago due to budgetary constraints; by leveraging free power and internet offered by our university partners, WO has been able to do a good job of monitoring earthquakes in New England at a minimal cost. In order to provide the accurate earthquake information in near-real-time that is required by the general public and by emergency responders, it is necessary to maintain a network of stations that record high-quality data and are highly reliable. Because the NESN stations have hard-wired AC power and ethernet communications, the NESN has nearly perfect uptime, in contrast to the Advanced National Seismic System (ANSS) backbone stations in our network, which provide higher quality seismic data but suffer long periods of downtime due to power and communications outages (Figure 2). However, buildings are not ideal locations for sensitive seismic sensors as these sites inevitably experience a high level of cultural background noise and numerous noise transients that degrade the quality of the data recorded. Furthermore, at all of the NESN stations the seismic sensors were almost 20 years old, and some may not have been operating at their design specifications. For these reasons, this project was carried out to upgrade and improve the NESN stations throughout the New England region.

In order to improve the performance of the NESN and to better meet the ANSS performance standards, thus improving earthquake monitoring in New England, some improvements were made at the NESN stations under this project: 1. At six of the stations, the station equipment was moved out of buildings and into newly-constructed seismic vaults; 2. At twelve of the stations the broad-band seismic sensors were upgraded to low-noise broadband sensors for accurate amplitude, and hence magnitude, determinations; and 3. At these same twelve stations, new 24-bit digitizers were installed; 4. Three-component accelerometers to record the strong ground motions from large earthquakes were installed. This report describes the improvements that were made at the NESN stations under this project.

Seismic Station Upgrades: New Seismic Vault Construction

Because NESN network is sparse (Figure 1), it is important that each station be as quiet and sensitive as possible in order to increase the distance from which it is able to detect small seismic events above the noise level. Under this project, we constructed new seismic vaults away from buildings for 6 NESN stations and relocated the station equipment from inside buildings to the new vaults at those 6 sites. By constructing dedicated vaults for the seismic sensors, we greatly reduced the cultural noise at those stations, and importantly, reduced the number of seismic

transients that mimic earthquake signatures. The vault design that was chosen was similar to vaults that have been used for other seismic networks (e.g., US Array – M. Alvarez, personal communication; ANSS – M. Meremonte and J. McMillan, personal communication). Each vault consists of two large plastic barrels that were imbedded in a concrete pier (Figure 3). The concrete pier was set in a 4' hole in soil (Figure 4) or, at one site, was constructed atop local bedrock (Figure 5). Trenches were dug for conduit to run cables to carry power and seismic signals from the pier to a nearby structure that had power and internet connections. At all of the sites where new vaults were constructed, the seismic sensors were installed in heavy-duty plastic barrels on the base of the concrete pier (Figures 6 and 7) and were capped by weather-proof covers (Figure 8). A GPS antenna was mounted on a pole near the instrument with a connection into the datalogger. In most cases the Reftek RT-130 datalogger was installed in a building with a local internet connection (Figure 9). Two or three Weston Observatory personnel supervised and participated in the construction of each new seismic vault. In accord with ARRA requirements, all necessary materials and supplies were purchased from supply stores that stock American-made products, and local back-hoe and concrete contractors were used at each site.

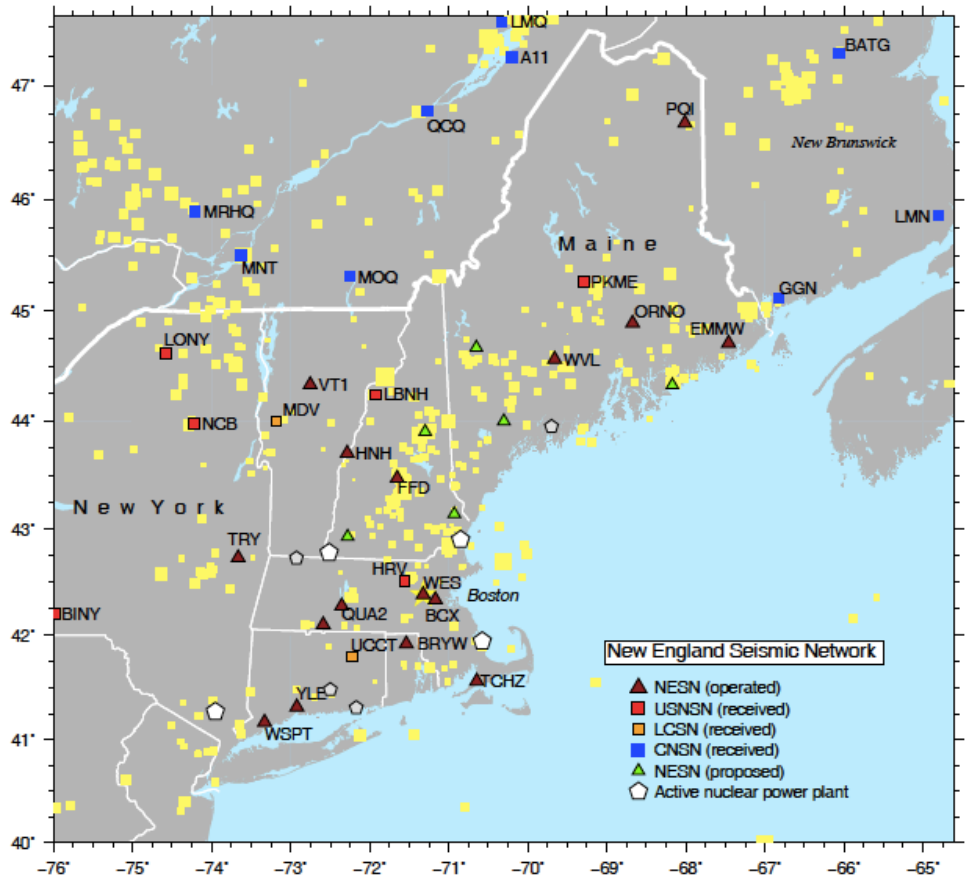

Figure 1. Map of the Northeast region showing stations operated by the New England Seismic Network (NESN), as well as those received in real-time from neighboring networks: USNSN, LDEO and CNSN.

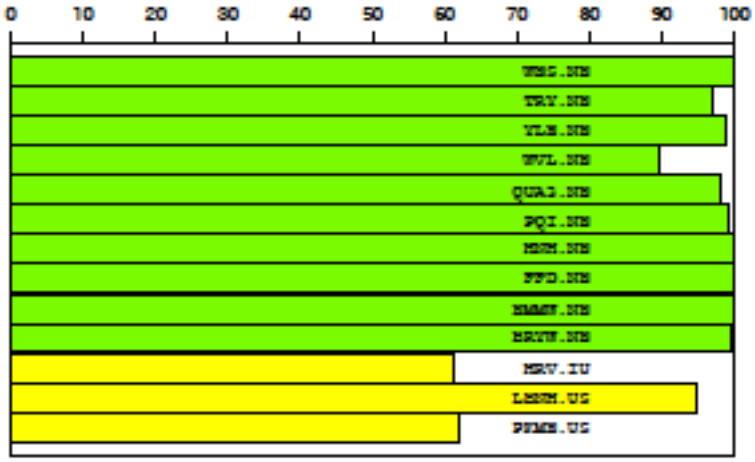

Figure 2. Percentage uptime for NESN (green) and USNSN (yellow) stations for the 3.5 year period 1/1/2006 – 7/6/2009.

New seismic vaults were constructed at 6 NESN stations: EMMW (East Machias, ME), FFD (Franklin Falls, NH), PQI (Presque Isle, ME), QUA2 (Belchertown, MA), VT1 (Waterbury, VT), and WSPT (Westport, CT). Three of these sites (BRYW, EMMW, and PQI) are on university campuses where the NESN station equipment had been installed inside a building prior to this project. At BRYW and PQI, the new seismic vaults were constructed outside of a university building with cable connections for power and the seismic signals into the building. At station EMMW the new seismic vault was constructed on bedrock (Figure 10), with a cable from a nearby building feeding power to the site. The seismic data is transmitted from the EMMW sensor to the university building by radio, where it is then put onto the internet. The station FFD vault was constructed outside of a building at Franklin Falls Dam, which is operated by the US Army Corps of Engineers. Cable connections for power and the seismic signals were run into the building. The station QUA2 vault was constructed outside of a Massachusetts Department of Conservation and Recreation ranger station near Quabbin Reservoir. Cable connections for power and the seismic signals were run into the building. The station WSPT vault was constructed outside of Rolnick Observatory, which is run by the Westport Astronomical Society. Cable connections for power and the seismic signals were run into the observatory. The station VT1 vault was constructed on the grounds of Crossett Brook Middle School. For this site, the vault was constructed about 300 m from the school building. Power to the vault is provided by an underground cable, but the seismic signals are transmitted via radio from the vault to the school building (Figure 11), where they are then connected to the school internet system. At stations EMMW and VT1 the Reftek RT-130 dataloggers are mounted in a box on the radio antenna mast near the seismic vault (Figure 11).

Seismic Station Upgrades: Station Equipment Replacement

As part of this project the equipment at most of the NESN stations was replaced with new government-furnished equipment (GFE). At 12 of the sites (BCX, BRYW, EMMW, FFD, HNH, PQI, QUA2, TRY, VT1, WES, WSPT, and WVL) new Reftek RT-130 dataloggers were installed. These are all 24-bit dataloggers that can handle 6 channels of seismic data. At all 12 of these sites, three-channel Reftek RT-147 accelerometers were installed. At 10 of the sites

Figure 3. Photograph of the seismic pier and plastic housings for the seismic equipment that was constructed at station QUA2.

Figure 4. Photograph of excavation of the seismic vault and cable trench at station PQI.

Figure 5. Preparation for vault construction on a bedrock surface at station EMMW.

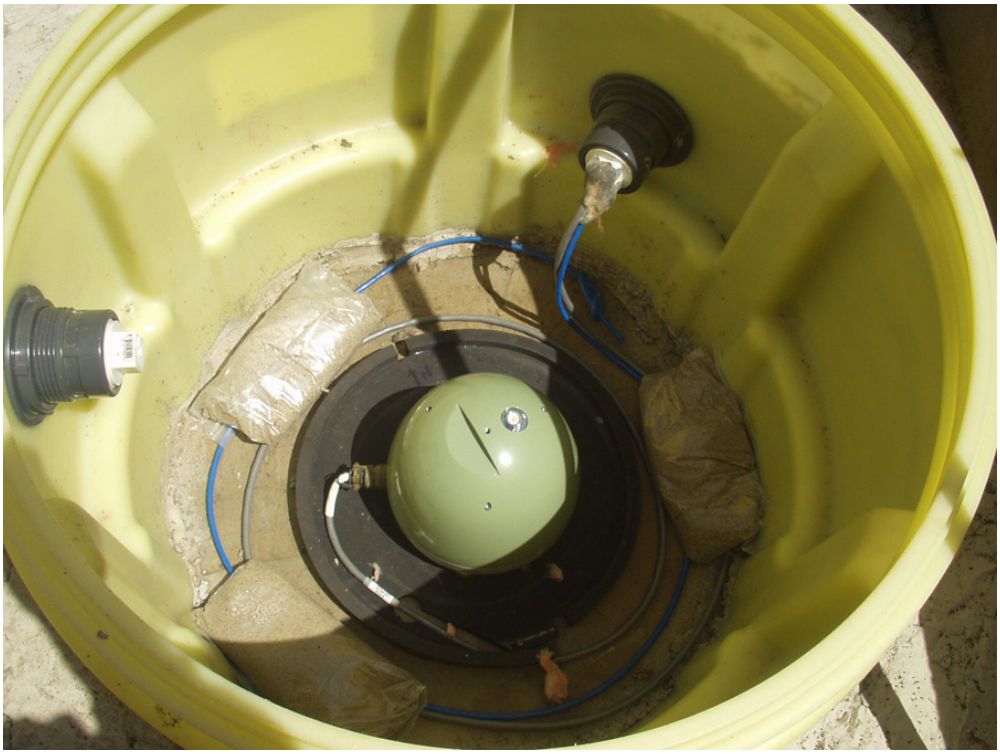

Figure 6. Installation of the Trillium-120PA seismometer in the new constructed vault at station EMMW.

Figure 7. Installation of the Reftek RT-147 accelerometer in the new constructed vault at station FFD.

Figure 8. Completed seismic vault at station QUA2.

Figure 9. Installation of the Reftek RT-130 datalogger and power supply at station FFD.

Figure 10. The completed seismic vault on bedrock at station EMMW.

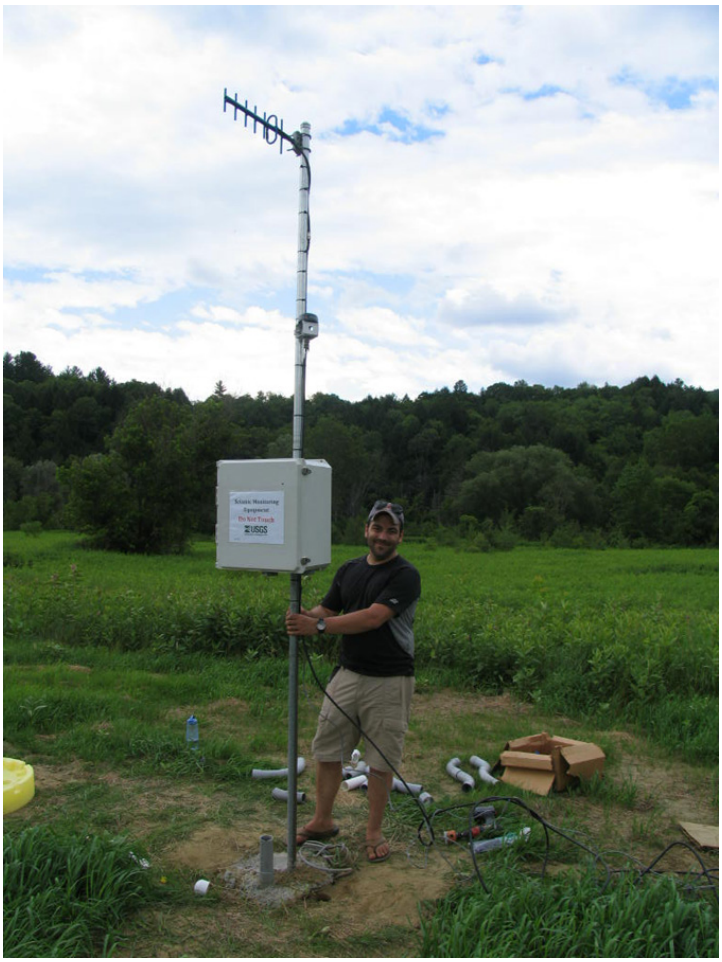

Figure 11. The radio antenna at station VT1 for transmitting data from the vault to the Crossett Middle School building. The Reftek RT-130 datalogger is contained in the box mounted near the center of the antenna mast.

(BRYW, EMMW, FFD, HNH, PQI, QUA2, TRY, VT1, WES, and WVL) three-component broadband Trillium 120PA seismometers were installed, while at BCX and WSPT Reftek RT-151 broadband seismometers were installed. The Trillium 120PA seismometers are flat in velocity response from 120 s to 145 Hz. The Reftek RT-151 seismometers are flat in velocity response from 120 s to 50 Hz. New GPS receivers were also included at each of the twelve sites where the new Reftek RT-130 dataloggers were installed. Table 1 lists all of the NESN broadband stations, including the current equipment that is operating at each station.

Weston Observatory Upgrade of NESN Computer Systems

In addition to upgrading the equipment at most of the USGS-funded remote NESN stations, Weston Observatory procured some new computers for acquiring and processing the NESN data. An Oracle/Sun SPARC T5120 was procured because it met the USGS-ANSS standard for the AQMS software system. In addition a smaller Dell Poweredge R210 workstation was procured to handle some of the real-time data control and processing tasks for the seismic data. With the upgrade of the NESN seismic stations as well as the addition of seismic stations from other

seismic networks in the region, the amount of data flowing through the Weston Observatory data collection computer has increased by more than a factor of five over the past few years. In order to help Weston Observatory handle this data volume, the USGS provided Weston Observatory with an IBM data server with 3+ Tb storage capacity. The USGS AQMS software system will be installed and made operational on these systems. The new combination of computers and software upgrades is designed to reduce real-time data delivery time to the USGS and will provide a needed redundancy to the AQMS server at Lamont-Doherty in New York.

The implementation of the Earthworm system across various computers and platforms at Weston Observatory has been redesigned with new computers in a way to provide a high degree of data reliability and redundancy (Fig. 12). In order to ensure against overload and subsequent system failure, one Earthworm data server at Weston Observatory (edge1) is dedicated solely to the import and export of waveform packets in real-time from the NESN stations. A second data server (edge3) imports and exports data from LDEO, CNSN, and USNSN. The data from these primary Earthworm servers are then distributed to other servers where specific tasks, such as data archiving, the creation of helicorder pages and the extraction of waveform data for automatic or seismologist-reviewed event analysis is carried out. Exports of all NESN waveform data to the USGS NEIC, to LDEO and to the GSC is also done on a dedicated server. All of the servers are backed up by new large-capacity UPS units, which in turn are backed up by an industrial-grade diesel generator able to power the entire observatory for 24-hours before needing refueling. The configuration in Fig. 12 has been designed with the necessary software to isolate different data analysis functions to prevent the analysis systems from interfering with the data acquisition system. It also has been designed with redundancy for the primary servers in the event of machine failure.

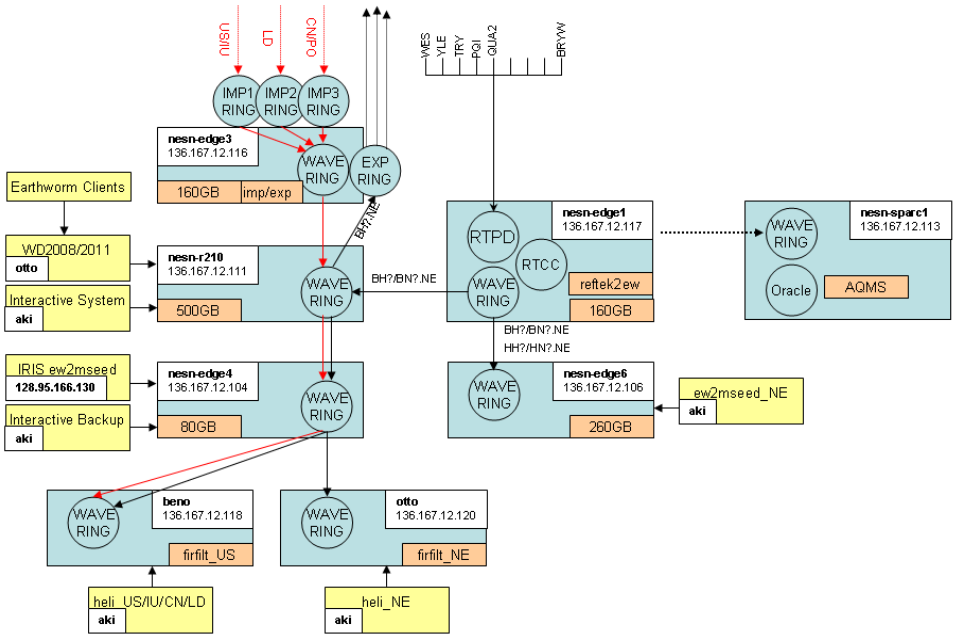

Network Geometry as of 09/26/2011

Figure 12. Schematic of the current NESN data collection system.

Strong-motion Data Recordings of the 23 August 2011 M 5.8 Mineral, VA Earthquake

As mentioned above, one part of the ARRA project at Boston College was to upgrade the NESN stations with 12 Reftek 147-01 accelerometers. In addition, Weston Observatory currently has four USGS NetQuakes instruments installed in New England (two are at independent sites and two are at NESN sites). Thus, for the first time there is an extensive network of strong-motion accelerographs operating in New England. These accelerographs successfully recorded signals from the M5.8 Mineral, Virginia earthquake on August 23, 2011. Although the ground-motions in New England from this earthquake were much less than .01g due to the large epicentral distance of New England from Virginia (Table 2), the recordings taken from the accelerograph channels from the NESN stations and from the NetQuakes instruments demonstrated the usefulness of operating strong-motion instruments in New England. Since not all of the strong-motion station had been incorporated into the NESN datastream at the time of the Mineral earthquake, only some of the NESN stations have reported pga values in Table 2.

Table 1. The broadband stations of the NESN as of November 2011.

Station	LAT	LONG	Elev (m)	Datalogger (S/N)	Firmware	Sensor (S/N)	Accelerometer (S/N)	GPS (S/N)	CABLE INFO
BCX	42.3350	-71.1705	60	RT-130 (AC8E)	3.2.8	RT-151 (9176)	RT-147 (G10736AS)	130-02 (7576)	RT-151 cable gray 83', RT-147 cable gray 33', GPS cable gray 33'
BRYW	41.9170	-71.5378	116	RT-130 (ACA4)	3.2.8	Tri-120PA (001048)	RT-147 (G10762AS)	130-02 (G2148)	Tri-120PA cable black, RT-147 cable 33', GPS cable color gray
DUNH	43.1370	-70.9348	53	RT-130 (B153)	3.3.0	Tri-120PA (001250)	NONE YET	?	
EMMW	44.7075	-67.4573	35	RT-130 (AB0D)	2.6.1	Tri-120PA (001031)	RT-147 (G10804AS)	130-02 (5470)	
FFD	43.4701	-71.6537	131	RT-130 (AC84)	3.2.8	Tri-120PA (001050)	RT-147 (G10713AS)	130-01	
HNH	43.7051	-72.2856	180	RT-130 (AC9F)	3.2.2	Tri-120PA (001049)	RT-147 (G10803AS)	130-01	
ORNO	44.9045	-68.6622	40	RT-130 (A818)	2.9.1	CMG-40T (T4Q18)	NOT YET	130-02 (5522)	
PQI	46.6713	-68.019	162	RT-130 (AC72)	3.2.8	Tri-120PA (001032)	RT-147 (G10711AS)	130-01	Tri-120PA cable Quabbin 130', RT-147 cable Belden gray 130', GPS cable RefTek gray 30'
QUA2	42.2790	-72.352	168	RT-130 (AD81)	3.2.8	Tri-120PA (000764)	RT-147 (G10801AS)	130-02 (5752)	Tri-120PA cable Nanometrics, RT-147 cable RefTek gray 164', GPS cable gray
TRY	42.7313	-73.6664	89	RT-130 (ACAO)	3.2.8	Tri-120PA (00759)	RT-147 (G10802AS)	130-02 (--46)	Tri-120PA cable black 83', RT-147 cable gray 83', GPS cable dark gray 33'
VT1	44.3206	-72.7513	149	RT-130 (ACA5)	3.2.2	Tri-120PA (001043)	RT-147 (G10800AS)	130-02 (7523)	Tri-120PA cable Nanometrics 83', RT-147 cable Quabbin gray 33', GPS cable Quabbin gray 33', Net cable Hubbel high speed cat 5 yellow
WES	42.3848	-71.3218	60	RT-130 (AB1D)	3.0.0	Tri-120PA (000942)	RT-147 (G10705AS)	130-02 (5766)	
WSPT	41.1712	-73.3278	91	RT-130 (ACC1)	3.2.8	RT-151 (9192)	RT-147 (G10776AS)	130-02 (5759)	RT-151 cable Quabbin gray 83', RT-147 cable Quabbin gray 83', GPS cable gray 33', DAS cable Carol
WVL	44.5646	-69.6617	50	RT-130 (AC85)	2.9.1	Tri-120PA (001041)	RT-147 (G10763AS)	130-02	Tri-120PA cable black 83', RT-147 gray 33'
YLE	41.3165	-72.9208	10	RT-130 (9366)	2.2.6	CMG-40T (T4266)	NOT YET	130-01 (G0963)	

Table 2. Peak Ground Accelerations Values (in g) in New England from the Mineral Earthquake 8/23/2011

Station	pga(N)	pga(E)	pga(Z)	Geometric Mean	Arithmetic Mean (Median)	Delta (km)
BRYW	0.00105	0.00067	0.00069	0.00084	0.00086	702.0
BCX	0.00084	0.00045	0.00061	0.00061	0.00065	754.3
FFD	0.00812	0.00661	0.00232	0.00733	0.00737	811.0
PQI	0.00026	0.00041	0.00026	0.00033	0.00034	1265.8
VT1	0.00251	0.00221		0.00236	0.00236	831.3
WES	0.00065	0.00053	0.00056	0.00059	0.00059	748.1
WVL	0.00029	0.00038	0.00025	0.00033	0.00034	1009.4

Bibliography

There were no external publications related to this project.