USGS Award Number 07HQAG0013

Final Technical Report

Operation of the Northern California Earthquake Management Center: Collaboration between UC Berkeley and the USGS Menlo Park

Award Term:
February 1, 2007 – January 31, 2010

Principal Investigators:

Barbara Romanowicz, Margaret Hellweg, Douglas Neuhauser
UC Berkeley Seismological Laboratory
215 McCone Hall #4760
UC Berkeley
Berkeley, CA 94720-4760
fax: 510-643-5811
510-642-1844, 510-643-9449
barbara@seismo.berkeley.edu
peggy@seismo.berkeley.edu

Abstract: In Northern California, the University of California Berkeley Seismological Laboratory (BSL) and the USGS Menlo Park (MP) collaborate closely to provide timely and reliable earthquake information to the federal, state, and local governments, to public and private agencies, to researchers nation- and worldwide and to the general public. This collaboration forms the *Northern California Earthquake Management Center* (NCEMC) of the California Integrated Seismic Network (CISN). The system operated jointly by BSL and USGS/MP for collecting, producing and managing earthquake related data provides enhanced earthquake monitoring by building on the strengths of the Northern California Seismic Network (NCSN), operated by the USGS Menlo Park, and the Berkeley Digital Seismic Network (BDSN), operaged by the operated by the UC Berkeley Seismological Laboratory. During this reporting period, the BSL worked with the USGS Menlo Park to continue operating the UC Berkeley component of the Northern California Earthquake Management Center and to complete the software development and testing necessary for the transition to the AQMS software, a new, more robust system for earthquake monitoring. The goal of these activities is to enhance and improve earthquake reporting in northern California.

USGS Award Number 07HQAG0013
Award Term: February 1, 2007 – January 31, 2010

Final Technical Report: Operation of the Northern California Earthquake Management Center: Collaboration between UC Berkeley and the USGS Menlo Park

Principal Investigators: Barbara Romanowicz, Margaret Hellweg, Douglas Neuhauser

1. Introduction

In Northern California, the University of California Berkeley Seismological Laboratory (BSL) and the USGS Menlo Park (MP) collaborate closely to provide timely and reliable earthquake information to the federal, state, and local governments, to public and private agencies, to researchers nation- and worldwide and to the general public. This collaboration forms the *Northern California Earthquake Management Center* (NCEMC) of the California Integrated Seismic Network (CISN), the California ”region” of the Advanced National Seismic System (ANSS). The system operated jointly by BSL and USGS/MP for collecting, producing and managing earthquake related data for this purpose comprises a chain of interrelated activities. This project provides support for the operation of the REDI system, UC Berkeley's system for preparing and processing earthquakes in realtime; for the code changes, development and testing necessary to implement the ANSS Quake Monitoring System (AQMS) software in the NCEMC; for developing, maintaining and operating both the realtime and datacenter (public) database systems at the USGS/MP and UCB; and for the operation of the Northern California Earthquake Data Center (NCEDC), the permanent repository for all data, metadata and parametric data generated and used within the NCEMC. In this document we describe progress and activities at the BSL to perform the tasks listed above.

(1) The operation of networks of seismic stations for measuring the movement of the ground. The BSL operates the Berkeley Digital Seismic Network (BDSN, Figure 1), as well as networks of borehole stations in the Bay Area and Parkfield.
(2) The operation of an on-line archive and databases for continuous digital waveform data, as well as other data, information and products pertaining to earthquakes. The BSL operates the Northern California Earthquake Data Center (NCEDC) which provides this service in the NCEMC.
3) The operation of the joint real-time earthquake processing and notification software system. During the past three years, the NCEMC transitioned from using separate systems at USGS/MP (Earthworm) and at the BSL (Rapid Earthquake Data Integration, REDI) [*Gee et al*, 1996], to using the AQMS (ANSS Quake Management System) software, formerly called the CISN software. Almost all of the programming, database and computer configuration development and testing for this process at both the BSL and USGS/MP are provided by BSL personnel.

A Memorandum of Agreement between the USGS/MP and BSL governs all aspects of our cooperative effort (http://seismo.berkeley.edu/bsl-usgs-mou.pdf).

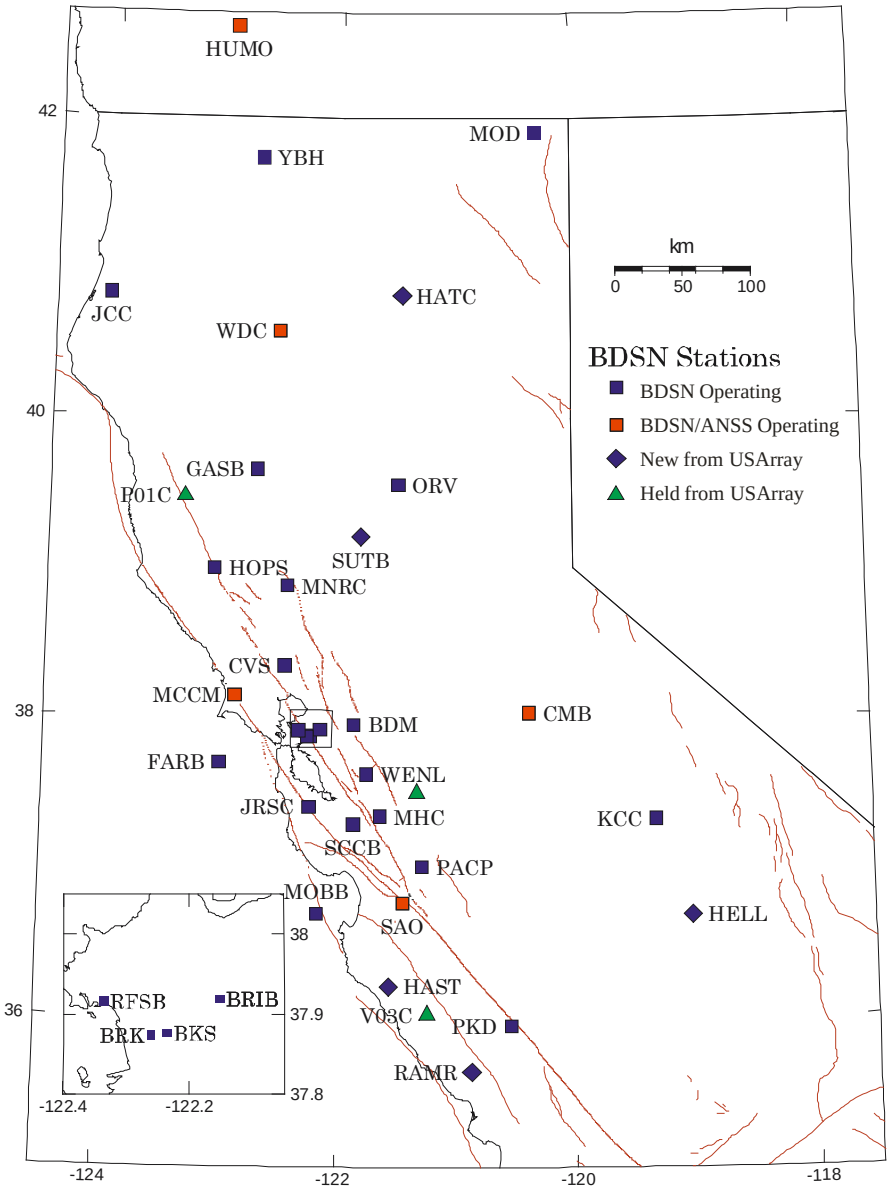

Figure 1: Stations of the Berkeley Digital Seismic Network. Squares and diamonds indicate stations of the BDSN that are currently operating. Data from stations marked by red squares are contributed to the ANSS backbone. Diamonds indicate stations adopted from the USArray Traveling Array. We have reinstrumented them and they are now operating as part of the BDSN. Green triangles are former USArray stations for which we have retained permits. All stations have broadband and strong motion sensors and realtime telemetry, except MOBB (broadband only) and SCCB and RFSB (strong motion sensors only). Station information is available online at http://seismo.berkeley.edu/bdsn/station_book.

Funding for the BSL's operational activities primarily come from three sources, the University of California Berkeley (UCB), the California Emergency Management Agency (CalEMA, formerly Office of Emergency Services), and from the USGS. With minor exceptions, operation, maintenance and development of the BDSN has been supported by UCB and CalEMA. Support from the USGS under project ***07HQAG0013*** has been directed toward (a) the operation,

implementation and improvement of the joint realtime earthquake reporting system to support the responsibilities that we share with the USGS Menlo Park, and (b) for the operation, development and maintenance of the NCEDC. During the past three years, we have completed the transition from the combination Earthworm/REDI earthquake monitoring system to the AQMS software, and the data center and database operated by the NCEDC are now an essential part of the production and publishing of realtime, current and historical earthquake information.
This project provides support for the operation of the REDI system, UC Berkeley's system for preparing and processing earthquakes in realtime; for the code changes and testing necessary to implement the AQMS software in the NCEMC; for developing, maintaining and operating both the realtime and datacenter (public) database systems at the USGS/MP and UCB; and for the operation of the Northern California Earthquake Data Center (NCEDC), the permanent repository for all data, metadata and parametric data generated and used within the NCEMC. In this document we describe progress and activities at the BSL to perform the tasks listed above. We also describe other activities which contribute to improving earthquake monitoring and information products in Northern California. When they have not been funded by this project, we note the source of support. Starting in September 2009, we have received funding through the USGS from the American Recovery and Reinvestment Act of 2009. These funds are primarily being used to upgrade our seismic instrumentation and infrastructure.

2. Production of Earthquake Information: Development and Transition to the AQMS Software in the NCEMC

The collaboration of the BSL and USGS/MP on a joint notification system for reporting on northern and central California earthquakes began in 1996. It capitalizes on the advantages of their two seismic networks. The Northern California Seismic Network (NCSN) is a dense network of mainly short period seismometers which allows rapid and precise determination of epicentral locations, while the BDSN is a sparser network of high fidelity stations which allow a more detailed characterization of the events. Before the final transition to the AQMS software in June 2009, earthquakes were detected and located in Menlo Park, and the information was passed on like a baton in a relay race, to UCB for further processing and entry into the database and catalog. With the full implementation of the AQMS software, the systems in Menlo Park and Berkeley are merged into a redundant earthquake notification system, with data from the NCSN and the BDSN combined for processing at each center. Details of the now extinct Northern California processing system and the REDI project have been described in past reports. Just before the beginning of this project period, we took the first real step toward the implementation of AQMS in the NCEMC, which we call the “CUSP replacement system”. The transition to event processing using the *Jiggle* user interface allowed the *CUSP* processing system to be turned off. With this step, the database became the primary holder of information, including event-related data, waveform-related data, and station- and instrument-related data. Now, the database is both the repository and source of information for the many interacting elements of the processing system.

In contrast to the Southern California Management Center, where the Southern California members of the CISN, USGS Pasadena and Caltech Seismological Laboratory are located across the street from each other, the NCEMC is a distributed center, with the UCB and Menlo Park elements separated by 35 miles and San Francisco Bay. With funding from the State of

California, the CISN partners have established a dedicated T1 communications ring, with the capability of falling back to the Internet. In addition to the CISN ring, the BSL and the USGS/MP have a second dedicated communication link supported by this project to provide bandwidth for shipping waveform data and other information between their processing systems.

2.1 AQMS Software Development and Implementation

The framework for the AQMS software is provided by a combination of the database system developed in Northern California and the realtime earthquake processing and review programs developed in Southern California as part of Trinet. A number of modules in the AQMS software system required adaptation to function properly in the NCEMC. This is due in part to the separation between the USGS MP and UCB. It is also caused by the differences in the way the NCSN and BDSN are operating, as compared to the Southern California Seismic Network (SCSN), and to the lower density of broadband stations in Northern compared to Southern California. The implementation of the AQMS software in the NCEMC is described below, as are the development and programming necessary to adapt the software.

During this project period, up until the transition to the AQMS software in June 2009, we continued to operate the REDI system at the BSL, as the USGS operated their Earthworm earthquake monitoring system to provide realtime information and products for ongoing seismicity. Hypocentral information (location, depth, origin time) were determined by the Earthworm system at the USGS MP, as was a M_d for an event. This information was passed to UCB. Although the REDI system can calculate hypocentral information, its main contribution to NCEMC operations were the automatic determination, when possible, of M_L for events with $M_d \geq 3.0$, and M_w for events with $M_L \geq 3.5$, and the entry of event and parametric information into the database. For events with $M_d \geq 3.0$, M_L was determined using simulated Wood-Anderson amplitudes measured from the horizontal components of the broadband sensors of the BDSN [*Uhrhammer et al*, 1996]. M_w was then calculated as part of the automatically initiated moment tensor inversion performed using complete local and regional waveforms. The M_w value is published and becomes the preferred magnitude for an event if the variance reduction for the moment tensor solution is greater than 40%. Because the network of broadband stations is relatively sparse, the moment tensor was only published after being reviewed. During the review process, data from broadband stations of the NCSN may be included with those from the BDSN.

Both the Earthworm/Earlybird systems at USGS/MP and REDI at UCB provided "linear" processing of information about an event. One "piece" of information (i.e. location) had to be available before the next (M_d) was calculated. The AQMS software (Figure 2) is different. First, waveform processing occurs continuously and is decoupled from automatic event detection and processing. Thus, at each network center, BSL or USGS/MP, waveforms are processed and reduced data streams with picks and other information are prepared and exchanged with the partner processing center (Figure 3). The event processing software systems operating at both centers therefore see the same set of information, so that reliable and robust locations and magnitudes are available from either center (Figure 4). Next, the realtime databases play a central role as coordinator and repository for the most up-to-date information about an event, and several different processes may be active preparing new information at any time (i.e. M_L may be independent of and concurrent with M_d). Finally, downstream processing steps, such as the

determination of moment tensors, fault plane solutions, preparation of ShakeMaps and event review through the java-based interface *Jiggle*, rely on the database as a source of information and provide updated reviewed event information to the database.

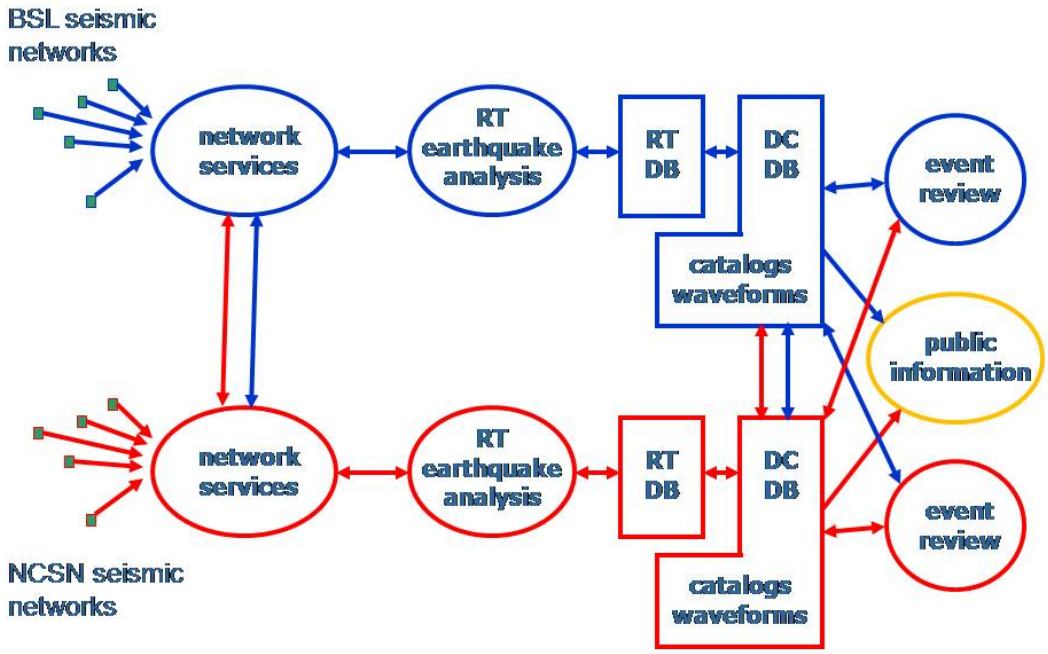

Figure 2: Details of the new Northern California processing system which has been operational since mid-June, 2009. Network service processing, that is, production of picks, ground motion amplitudes, and other reduced information, occurs at both datacenters, and the information is exchanged. Complete earthquake information processing systems exist on both sides of the Bay, and up-to-date information is exchanged by database replication.

2.2 Important Developments and Milestones in the Transition Interval

CUSP Replacement System: In the NCEMC transition to the AQMS software, the so called "CUSP replacement system" REDI provided the important function of entering all event information from automatic processing into the database. This step allowed the NCEMC to retire CUSP as the event review tool and initiate use of *Jiggle* for event review. *Jiggle* interacts with the database to extract event information and enter revised information after the review is complete. The transition to *Jiggle* took place November 29, 2006. Since then, the database has been the authoritative source of information about current and recent events in place of the flat files of yore. During this project period, we also began the process of entering complete event information from "historical" events, those that occurred before November 29, 2006, into the database (see below). We are still working to complete event waveform collections for past events of the digital era. While all existing waveforms from the NCSN (network code NC) have been associated with their respective event in waveform gathers, no associations have yet been made for waveforms for events prior to November 29, 2006 for stations operated by BSL

(network codes BK, BP), Pacific Gas and Electric (network code PG), and Calpine (network code BP). When that happens, previously unreviewed events, such as San Simeon aftershocks, will be analyzed using *Jiggle*, and the database will become the complete and authoratative source for information about all NCEMC events.

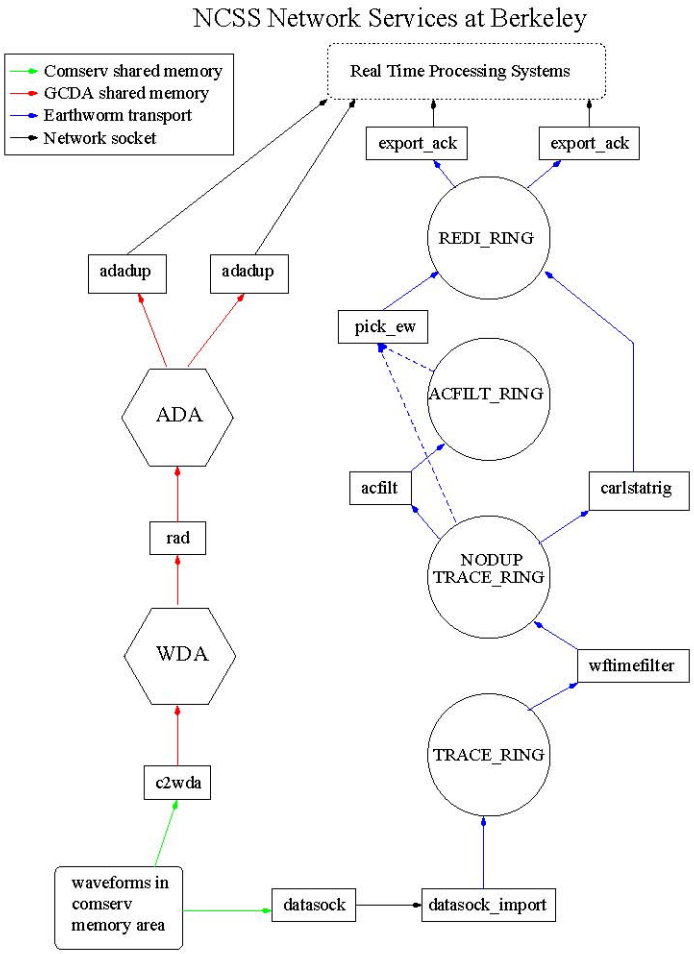

Figure 3: Flow of data from comserv areas through network services processing. One stream of the network services provides picks (and currently still provides codas) determined using the programs shown in the right flow path. Every 5 seconds, ground motion parameters are also determined, including PGA, PGV, PGD, and ML100 (left flow column). Parameters from the network services are available to the CISN software for event detection and characterization. Data are also logged to disk (via datalog), distributed to other computers (mserv), and spooled into a trace ring for export.

Continuous Amplitude Processing: The AQMS software makes use of "data pre-processing", that is waveforms are continually scanned for picks, and processed to prepare amplitude values that may be harvested for M_L determination or for ShakeMaps and assessment of strength of ground motion (Figure 3) [*Kanamori et al*, 1999]. The processing of amplitudes occurs in a system called *RAD*, which was set up in test mode at USGS/MP and UCB in February 2007. It became part of the production system, with the transition to the AQMS software in June 2009.

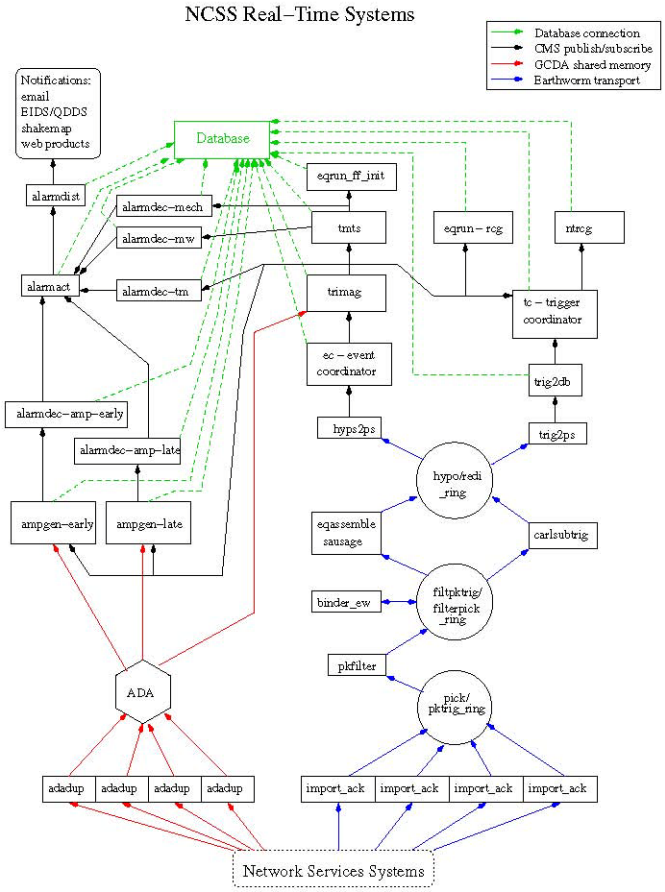

Figure 4: Schematic diagram of processing in the NCSS system. The design combines elements of the Earthworm, TriNet, and REDI systems

Waveform Archiver: When an event is declared by the AQMS software, whether there is sufficient data for a hypocenter or only enough to recognize that something has happened that should be reviewed by an analyst (a trigger), waveforms are collected, associated with the event through the database, and made available to *Jiggle* and other processes or users. During the project period, we made important changes to the waveform archiver developed in Southern California, so that it could be implemented in the NCEMC. It is now more generally applicable, and can retrieve waveforms from a variety of types of waveform sources. It can even be configured to retrieve waveforms from remote systems such as remote earthworm nodes. The request card generator and waveform archiver have been operating in the NCEMC since November 2006, first as part of the CUSP replacement system and now in the AQMS production system.

Leap second compatibility: Unbeknownst to each other, the NCEMC operated using a time standard including leap seconds, while the SCSN ignored them. For the AQMS software to function properly with the databases at both locations, this discrepancy has been addressed through coding changes to fundamental elements of the software package. During the project period, we recognized the magnitude of this discrepancy and developed standards for the

implementation of leap second compatible software. Changes to the software have been completed. Within the package of AQMS software, all processes now operate on "true UTC time", that is, time incorporating leap seconds. The software is configurable to interface with databases that either use or ignore leap seconds.

Moment tensor software for automatic and review operations: The NCEMC and the SCSN both use Doug Dreger's complete waveform inversion code [*Pasyanos et al*, 1996, *Ford et al*, 2009] to determine moment tensors and moment magnitudes (M_w). The SCSN developed a java-based interface (*tmts*) that ran the code automatically, allowed moment tensor review and inserted moment tensor information and M_w into the database. Until 2007 at the NCEMC, information from the automatic moment tensor solution was entered into the database, in the *mec* table, but reviewed solutions were not, and were therefore not available from the database. Prior to implementing *tmts* in the NCEMC, we developed a new suite of tables to encompass moment tensor related information in the database. The new tables are described online (http://www.ncedc.org/db/Documents/NewSchemas/PI/v1.5.7/PI.1.5.7/index.htm). The solution can now be recomputed exactly from information in the database. In addition, we adapted the moment tensor review interface to allow more manipulation by the reviewer. The new review interface has been in use in Northern California since August 2007. The automatic moment tensor system went into production mode with the transition in June 2009 to the AQMS system. Associated alarming modules and conditions have also been implemented which allow moment tensor information from both automatic and reviewed solutions to be automatically forwarded to users and the web. Now, automatically determined moment tensors are published to the web if they are of very high quality, that is if the variance reduction is greater than 80%. The criteria for accepting and publishing M_w as the authoritative magnitude have not changed in Northern California: If the variance reduction of an automatic solution moment tensor solution is greater than 40%, M_w is authoritative; and if a reviewed moment tensor exists, M_w is authoritative. With this tool at our disposal, we have been able to determine moment tensors for events as small as M_w 3.1.

Moment Tensors Since 1995 in the Database: Since *tmts* was implemented for review mode in the NCEMC, we have populated moment tensor solutions into the database for almost all "old" events since 1995 for which moment tensors existed by reviewing them again. In addition, we have reviewed a number of other past events and determined moment tensors and/or M_w for them. These events include more than 30 from the aftershock sequence of the San Simeon earthquake. In October 2009, we embarked on a project to review past events in the catalog which have M_d greater than 3.5, but have neither a M_L nor an M_w. Moment tensor solutions are available in several formats through a catalog search of the database at http://www.ncedc.org/ncedc/catalog-search.html, by selecting the option “Mechanism Catalog”. In addition, web pages describing recent moment tensors are available at http://www.ncedc.org/mt.

Fault plane solutions (fpfit): In the NCEMC prior to the transition to AQMS software, fault plane solutions were calculated "after the fact", and were not entered into the database. As part of the development of new mechanism-related tables, we reviewed the input for and output of *fpfit* and determined how they could be stored in the same suite of tables. We developed and implemented a set of codes for automatically running *fpfit* on new events to populate their fault plane solutions

into the database and publish them to the web. *fpfit* now runs automatically after a new event is entered into the database, and after that event has been reviewed in *Jiggle*. We have also run *fpfit* in batch mode to produce solutions for all suitable past events since 1968 which are now in the database. These solutions are available in several formats through a search of the database at http://www.ncedc.org/ncedc/catalog-search.html, by selecting the option "Mechanism Catalog".

"Historical" catalog: The database became the authoritative resource for information on current and recent seismicity starting November 29, 2006. We now consider it important that it include our "historical" events, as well. In this way, consistent event information is available to users from a single source, and we are able to review past events using the same tools as for current seismicity. In the past, there were two seismicity catalogs for Northern California, that of UCB with its first events from 1932 and that of the USGS/MP with events starting in 1966. For populating the events into the database, we agreed that prior to 1966, the UCB events provide the best (only) representation of Northern California seismicity. Since November 2006, with the *CUSP* retirement, events information is derived from a comprehensive view of data collected by the BSL and USGS/MP. For the interval between those two dates, we intend to combine the information from the two catalogs, a non-trivial process. As a first step, we agreed that the NCSN catalog from 1966 through November 2006 would provide the initial view. It was not a trivial process to populate the NCSN catalog for the years 1966-2006 into the database. It entailed the entry of over 631,000 events and almost ten million coda values and phase readings. Processing programs changed over the course of the forty years encompassing the catalog, so the process of entering and QCing the information was non-trivial. We are now satisfied that the parameteric information from the NCSN catalog is correct. The UCB catalog for 1932-1966, when UCB was the only network operator, is also in the database. We are now working to unify UCB and NCSN events from 1966-2003, producing a true Northern California catalog. We are also currently working to add BK, BP, BG and PG waveforms to events from before December 2006.

Operating AQMS test system: During the project period, the AQMS software or parts of it ran on a test system at UCB. In each case, this system received current realtime information, and its products were compared with the output of the production systems. As we progressed toward implementation of AQMS, we ran several important tests: *Jiggle* implementation and its operation compared to the *CUSP* system; automatic processing by *tmts*; alarming, magnitude operations and postprocessing. We fixed a number of bugs and adjusted many parameters to improve operations in the NCEMC. We continue to operate the test system at the BSL, so that we can test and review possible improvements, such as statewide exchange of picks and realtime preparation of M_d.

Menlo Park database, dcmp: The NCEMC operates two parallel processing systems, one at UCB and one in Menlo Park. Each strand has a realtime database which works with the automatic event processing systems, and a datacenter database which is used for post-processing. The two datacenter databases, *dcucb* at the BSL and *dcmp* at USGS/MP, replicate with each other and with the database at UCB which is available to the public, *publicdb*. UCB programmers and database managers configured *dcmp*, filled it and brought it into the replication scheme. It can now be used in production. Menlo Park personnel have used *dcmp* for timing events, although waveforms are still primarily available through the NCEDC at UCB.

Migration of production/public databases to dcucb, dcmp and publicdb: The AQMS system has datacenter databases for post-processing and event review at both UCB, *dcucb*, and in Menlo Park, *dcmp*, and a separate (read-only) database at UCB for public access, *publicdb*. During this project, we migrated from the slip database at UCB to the use of *dcucb*, *dcmp* and *publicdb* for these three functions. Data are continuously replicated among these databases to ensure that each of them is up-to-date at all times. All database maintenance, support and programming in the NCEMC are provided by BSL personnel.

Realtime waveforms from borehole networks: During the project period, realtime waveforms from the various borehole networks operated by UCB (HRSN at Parkfield, NHFN and miniPBO in the San Francisco Bay Area) were been brought into realtime processing, and are being collected in event waveform gathers. In particular, HRSN waveforms are now fed into the USGS earthworm computer at Parkfield, where their data participate in local event detection; they are also fed into the full NCEMC event processing stream at UCB.

M_L calibration for CISN: In the past, Northern and Southern California used different distance and station calibrations for determining M_L. Working together with Southern California, we used a large dataset of amplitudes from broadband stations including SCSN, NCSN, BDSN, Anza and TA stations to calculate and agree upon a new distance decay function ($\log A_0$) valid for the entire state, and corresponding dM_L's for the horizontal components of the broadband/strong motion stations and for strong motion only stations, including NSMP stations. This new M_L(CISN) has been in operation in Southern California since early 2008, and in Northern California since the June transition to the AQMS software. Our next efforts will be directed toward (a) determining dM_L's for historical stations and (b) developing a means to use vertical channels from broadband, strong motion and shortperiod sensor for M_L determination.

Quicklook locations in the AQMS software: With the transition to the AQMS software in June 2009, we lost the capability in Northern California to publish "quicklook" locations. Such a location is an initial estimate for an earthquake, when at least 25 picks have been collected, and is available within 15 – 45 s of the origin time, depending on the network density. Quicklook locations show up on the map as a square with a red cross, and are either quickly updated with the magnitude, when it becomes available, or are deleted if the event is not real. We added programming to the AQMS software to allow early locations to be published without magnitudes and adapted the alarming criteria to handle them correctly. Quicklooks were reinstated in Northern California in November 2009.

Aftershock probabilities and swarm detector: In the old realtime earthquake processing system, we had codes to determine, review and publish aftershock probabilities based on seismicity, and to detect swarms of earthquakes. These capabilites were lost in the transition to the AQMS software. We wrote code to reinstate them, including appropriate alarming actions. They were

4. Production of Earthquake Information: Reporting on Northern California Earthquakes in the Project Period

UCB and the USGS MP share earthquake reporting responsibility for Northern California, as the Northern California Seismic System (NCSS). Event times and locations from the NCSS are usually made public as quicklook locations within 15 s of an earthquake's origin if it is within the dense region of the networks. Parameters for events at or beyond the networks' edges may be somewhat delayed (30 s). The various magnitudes are only available after codas have been collected, which may take up to several minutes. For events of magnitude 3.0 and greater, local magnitude (M_L) is calculated within 30 s of M_d, and moment magnitude (M_w) within 5 minutes of the origin time, when applicable and possible. Event information is stored automatically in a database.

During the time period of this contract, over 66,000 local earthquakes were located in the NCSS, and most of them were reviewed by analysts. Of the total, 394 events had a magnitude greater than 3.0. M_L was determined for 397 of the earthquakes and M_w for 132 of them. Moment tensor solutions were calculated and reviewed for 129 earthquakes in the three years, with magnitudes ranging from 3.1 to 6.5. Shakemaps were calculated and published for 103 events. The two largest events which occurred during the project period were the M_w 5.4 Alum Rock earthquake during the evening of October 30, 2007 local time (Figure 5), and the M_w 6.5 Offshore Ferndale earthquake on January 9, 2010 PST (Figure 5). While the former caused little damage, it created a lot of excitement. The latter caused both excitement and damage along the North Coast.

4.1 The Mw 5.4 Alum Rock Earthquake

The Alum Rock earthquake shook the entire Bay Area on the evening of October 30, 2007, shortly after 20:00 PST. It occurred at 37.43 N and 121.77 W at 03:04:55 UTC on October 31, 2007, just east of the city of San Jose, California. It was widely felt throughout the Bay Area, and more than 43,000 people reported to "Did you feel it?". The BSL quickly produced both a moment tensor and a finite fault solution for the event. The BSL's finite fault solution [*Dreger and Kaverina*,2000, *Dreger et al*, 2005] for the event showed that it ruptured to the SE from the epicenter, which was confirmed by the extent of the aftershocks, and also by the unusually high intensity shaking measured to the SE and shown on the instrumental ShakeMap (Figure 5). The NCEMC prepared an internet report on this event, which is posted at http://seismo.berkeley.edu/~peggy/AlumRock.htm.

4.2 The Mw 6.5 Offshore Ferndale Earthquake

On January 10, 2010 at 00:27:39 UTC (or January 9, 2010 at 16:27:39 pm PST), a M_w 6.5 earthquake occurred in the Gorda Plate offshore of Ferndale, north of the Mendocino Fault Zone. It was much closer to shore than the M_w 7.2 2005 earthquake, only 35 km WNW of Ferndale. Consequently it was more widely felt than the 2005 event and also caused almost $40,000,000 in damage in the region. It was felt from San Francisco well into Oregon, and east into Nevada. Although initially the realtime location placed the earthquake at a depth of 12 km, both the moment tensor and the finite fault model produced by the BSL indicated that the rupture occurred at greater depth. The automatic finite fault solution showed that the quake ruptured a

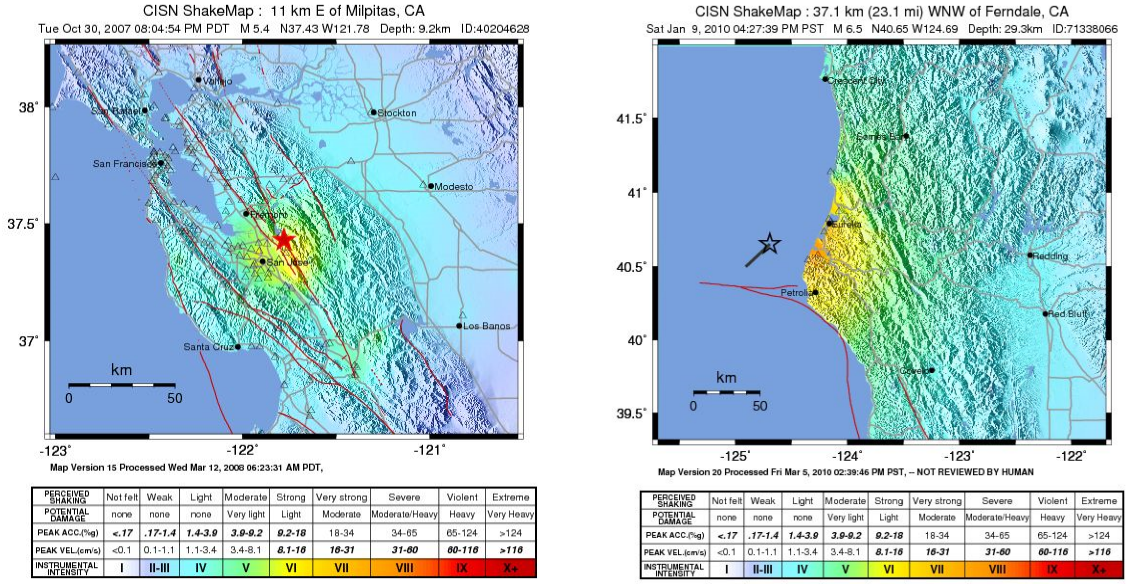

Figure 5: Shakemaps for the Mw 5.4 Alum Rock earthquake (October 31, 2007, 03:04 UTC) and Mw 6.5 Offshore Ferndale earthquake (January 10, 2010, 00:27 UTC)

left lateral strike slip fault southwestward from the epicenter for a distance of about 25 km. This was confirmed in the review process. The NCEMC prepared an internet report on this event, which is posted at http://seismo.berkeley.edu/eqw/eqw_10.01.10.html.

4.3 Northern California ShakeMaps

Shakemaps were calculated and published for 103 Northern California events with magnitudes greater than 3.5 during the project period. Since the transition to the CUSP replacement system in November 2006, ShakeMaps have the same event identification number as the event in the catalog. Prior to that date, ShakeMaps had the event identification number assigned by the realtime system, but when events were reviewed by CUSP, they received a different event identification number. This has caused some confusion in the catalog. With the release of ShakeMap 3.5, we are planning to recompute all ShakeMaps in the Northern California catalog. This will solve three problems: (a) Some ShakeMaps were calculated by older versions of the program and are missing important information, such as uncertainties; (b) when the ShakeMaps are recalculated, the event identification number will be reconciled; and (c) during the San Simeon sequence, ShakeMaps were calculated for small events for which no data existed. Although we have not yet installed ShakeMap 3.5 as the production system, we are running it in test mode, and have already recalculated the old ShakeMaps. We are reviewing them for consistency before publishing them. Also, with the transition to the AQMS software, ShakeMaps are more closely integrated with the realtime processing system. Prior to June 2009, not all amplitudes provided to the ShakeMap program were entered into the AQMS database. Before beginning the recalculation project, we harvested all old amplitudes from the ShakeMap systems and provided them to the database.

5. The Northern California Earthquake Data Center

The BSL operates the Northern California Earthquake Data Center, which is a long-term archive and data distribution center for geophysical and earthquake-related date. The NCEDC archive currently contains more than 41 TBytes of data from 1974 through 2010 (Figure 6). The majority of data are seismic timeseries from northern California networks (NCSN (network code NC), BDSN (network code BK), HRSN (network code BP)). However, we also archive and distribute both USGS/MP campaign and continuous GPS data from northern California as well as high sample rate strain, magnetic field, and electric field data from BSL and USGS networks. Using external funds from EarthScope, we also archive strain data from the Plate Boundary Observatory (PBO) as well as seismic and strain data from SAFOD. Data are available through the web at http://www.ncedc.org. A variety of tools for catalog and waveform extraction are implemented at the NCEDC, and are described on the web page.

5.1 Database operation and maintenance

During most of the project period, the realtime and datacenter databases for the NCEDC resided at UCB. Parameteric information for new events was entered by the REDI system and, after the transition away from *CUSP* in November 2006, event waveforms were collected from UCB and USGS/MP wavepools by the waveform archiver. The datacenter database is updated by database replication, and provides up-to-date information to outside users and to event review analysts. UCB provides all database expertise in the NCEMC, configuring, installing and upgrading databases and ensuring proper replication; developing, altering and implementing schema and tables; and preparing modules and user interfaces to input and extract event information. At the beginning of the project period, two realtime databases were operating at UCB, and replicating to the datacenter database at UCB. Before June 2009, when the AQMS software began operating, Stephane Zuzlewski of UCB installed one real-time and one datacenter database at USGS/MP. He ensured that they replicate correctly with each other and with the corresponding databases at UCB as well as with the datacenter database at UCB. We have practiced various scenarios for event review, with timers in MP connecting to the MP databases, for example. UCB staff are also participating in the review of untimed events from past earthquakes (San Simeon, Parkfield), so that we will have expertise if backup operations are necessary.

5.2 Waveform holdings

Continuous waveform data are delivered from all stations collected by the BSL or USGS/MP in real-time to the NCEDC, where they are made available to users via DHI servers and web-accessible files in the NCEDC DART (Data Available in Real Time) system. Most continuous waveforms are archived automatically in channel-day files at the end of each UTC day. Data channels that are processed and reviewed by human quality control (QC) procedures are processed after the end of each UTC day, and are normally archived within 2-3 days. Triggered waveform data for events are automatically collected by event waveform archiving software using waveform requests generated by the AQMS real-time earthquake processing system. These waveforms are available for NCEMC analysts and remote users as soon as they are collected, normally within minutes.

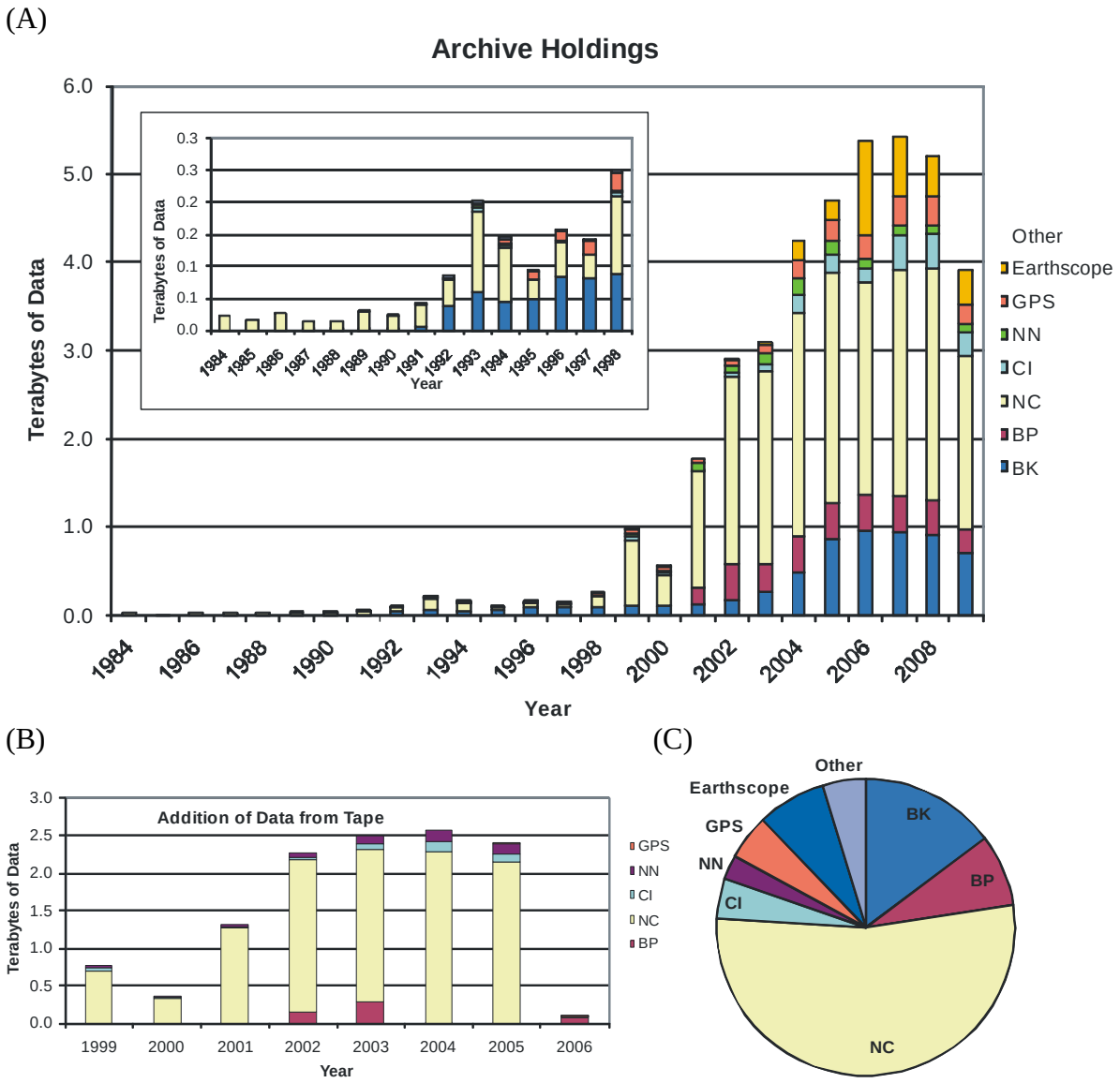

Figure 7: Holdings of the NCEDC. Total holdings are currently more than 41 terabytes. (A) Annual volume of data in the NCEDC by network and year. (B) Changes in dataholdings for 1999 - 2006. Increases are from adding tapes of NC data from 1999 – 2005 and tapes of BP data from 2002 and 2003. The additional CI and NN data come from the NC tapes. (C) Volume of data in the NCEDC by network. The volume of data from the NC network has increased immensely since we began archiving its waveforms continuously. The NC designation includes data from the NC, CE, NP, PG and WR networks. Volumes of miniseed data distributed by the NCEDC for the past three years are 811 GB in 2007; 1031 GB in 2008; and 902 GB in 9 months of 2009.

The NCEDC uses the SAMFS hierarchical storage management software to manage all of the waveform storage. SAMFS can automatically create up to 4 copies of each data file on different storage systems and media. We create one copy of all waveform data on RAID disk for rapid access, one copy on LTO tape which is kept online in the tape library, and one copy on LTO tape

which is stored offsite. Should a RAID system ever fail, the SAMFS system can automatically rebuild the disk copy of the data from the online tape copy. At the present time, the NCEDC holds more than 41 TBytes of data. Each year, more than 4.3 TB of new data are added to the NCEDC archive.

The NCEDC has exceeded the capacity of the tape library and can no longer maintain an tape copy of all data online. In addition, SUN will no longer support this tape library after 2010. (Note: The BSL was explicitly prohibited from spending any USGS funds on tape library expansion or replacement in its 2007-2009 budget, in its 2010-2015 budget and in funds it is receiving through the USGS from the American Reinvestment and Recovery Act).

5.3 Recent additions and improvements at the NCEDC

Continuous NC data since 1999: In the NCEMC, we began archiving continuous NCSN data in December 2005. For prior years, only event data were available. However, USGS/MP had tapes of continuous data going back to the early 1990s. During this project period, the BSL read and QC'd NC data from 1999 through December 2005. These data are now available online. Unfortunately, only few tapes existed for 2002. The online data are already being used for research on non-volcanic tremor noise studies. We continue to work with the USGS/MP to read and archive continuous data from before 1999, where it exists.

Continuous BP data since 2002: After the San Simeon earthquake (December 2003), we turned on continuous realtime recording for the stations of UCB's borehole network in Parkfield. During the project period, there have been two improvements to this dataset. First, we were able to read and QC the continuous data from tape for all channels since early 2002. Second, thanks to improvements to the USGS/MP microwave system, we now receive the data for all BP channels at the NCEDC in realtime.

Event gathers include data from all contributing networks: Since *CUSP* was replaced by *Jiggle* in November 2006, event gathers at the NCEDC include data from all stations used in earthquake monitoring and collected by USGS/MP and UCB. Thus, event gathers since November 29, 2006, include data from stations of the BK, NC, NN, NP, BP, BG, PG, and WR networks. We are currently working to add waveforms from networks other than NC to event gathers for events prior to that date.

Mechanisms from the database: Both UCB moment tensors (since 1995) and *fpfit* solutions (since 1966) are now in the AQMS database of the NCEMC and can be accessed online at http://www.ncedc.org/ncedc/catalog-search.html, by selecting the option "Mechanism Catalog". There are several possible formats available, including formats for plotting programs.

Catalog output in KML: We have added the option of choosing output in KML format to the catalog search page http://www.ncedc.org/ncedc/catalog-search.html so that earthquakes from the NC catalog (and the ANSS catalog) can easily be displayed in Google Earth.

PDF plots for seismic data collected at the NCEDC: For several years, we have been preparing and publishing power spectral density plots presented as probability density functions according

to the algorithm developed by *McNamara and Buland* [2004]. These plots now show data for almost all stations and channels collected at the NCEDC. The networks processed include data from the BK, BP, CI, NC, NN, NP, PB, PG SF and WR networks. The PDFs can be viewed at http://www.ncedc.org/ncedc/PDF/html/. In addition, the code was adapted, so that if one right-clicks on a specific point, one receives a list of the timeseries that contributed to that point. This makes it easier to review data for instrumental problems.

6. Other BSL Activites Contributing to Improved Earthquake Monitoring and Information

6.1 Network and Station Operations, Maintenance and Development

The BDSN is now a network of 32 stations sited throughout Northern California, with the exception of two stations, one in southern Oregon (HUMO) and one on the seafloor off the coast of Monterey Bay (MOBB). All stations are equipped with broadband seismometers and accelerometers, except three: SCCB and RFSB have only accelerometers and MOBB has only a three-component broadband sensor. We take particular pride in high quality installations, which often involved lengthy searches for sites far from sources of low-frequency noise. We have also continuously improved our installation procedures and carefully monitor noise conditions and problems. As a result, background noise at many of our sites is comparatively low. Data from all stations flow into real-time processing in the NCEMC and are QC'd and archived continuously at the NCEDC.

STS-1 Electronics, Sensor and Baseplate Development: (funds from NSF) UCB operates 10 stations with very high-quality broadband STS-1 seismometers which are at least 15 years old. The sensors are no longer produced or supported by the manufacturer. Evidence has been found that the electronics for these sensors can decay. With funding from the NSF, UCB has participated in a project to develop and test new electronics for the STS-1 sensors. In addition to providing feedback and signal-conditioning, the new electronics also allows remote recentering and calibration. This is important for remote stations which may be inaccessible for large parts of the year. We are now participating in a project to develop a new seismometer and baseplate based on the STS-1. The new sensors will have the same high level of performance as the original STS-1s.

Refurbished STS1 Electronics: (funds from UCB) At several BDSN stations, the electronics for the STS-1s degraded. We refurbished the electronics for the STS-1 sensors at HOPS, KCC, MOD and SAO. These stations are now operating well.

Station Reconstruction at SAO: (funds from UCB) The station SAO was opened in 1966. Over the years the infrastructure had decayed. Thus, the equipment at station SAO has been poorly protected from enviromental influences and vermin. We rebuilt the vault to make it thermally more stable, safer and tighter. The data quality from this station has improved. We also removed defunct equipment that was not longer in use.

New stations adopted from USArray Travelling Array (TA): (funds from CalEMA/OES and FEMA) Through CalEMA we received funds during the past two project periods to purchase equipment for seven new stations. We monitored and used data from the TA in Northern

California, intending to select several to be added to the BDSN. We chose seven, and as the TA has pulled out during the Fall of 2007, we have received permits and installed equipment in them. Five of these stations are now operating and sending data to UCB (Figure 1). The new stations are HELL, HATC, HAST, SUTB and RAMR.

Realtime data from MOBB: (Funds from UCB, MBARI, NSF) With funding from the National Science Foundation (NSF), UC Berkeley and the Monterey Bay Aquarium Research Institute (MBARI), we installed and have operated MOBB, an ocean-bottom seismometer in Monterey Bay, since 2002. During this project period, we connected the MOBB seismic station to the Monterey Accelerated Research System (MARS) undersea cable, which provides real-time telemetry to the site. Since February, 2009, we have been receiving data from MOBB in real time. Unfortunately, the extension cable between MOBB and the MARS science node was trawled and damaged in March 2010, and is awaiting a replacement, funded by NSF.

Telemetry Improvements for FARB: (Funds from UCB) One network configuration problem for monitoring earthquakes in Northern California is that the fault we expect to generate the largest quake, the San Andreas Fault, is at the edge of the network. FARB, the BDSN station on the Farallon Islands off the coast of San Francisco is important for providing constraints on locations and mechanisms. It has been plagued by poor telemetry. During the project period we worked to improve the reliability of the radio link between FARB and UCB.

Station equipment upgrades: (Funds from USGS-ARRA) Dataloggers at many of the BDSN stations are old, if not ancient in computer terms. This has two implications for earthquake monitoring in Northern California. The first is that this equipment may fail at any time. The second is that the data are telemetered in a delayed fashion, so that they are less useful for earthquake early warning and other applications that require immediate information. In September 2009, we commenced a project with ARRA funds to upgrade our old dataloggers at 25 BDSN stations. We are receiving Q330 dataloggers as government furnished equipment. At the same time, we will replace the remaining FBA-23 accelerometers in the network with Episensor ES-Ts.

6.2 Earthquake Monitoring and Reporting

Earthquake Early Warning: The BSL is participating in the Earthquake Early Warning pilot project funded by the USGS. From 2006-2009, we implemented a test version of the earthquake early warning algorithm ElarmS (http://www.elarms.org) and operated it in a quasi-realtime mode. At the BSL, we also provided a processing platform for the other algorithms being tested, the On-site and Virtual Seismologist. The project description and results can be found in the final report at http://earthquake.usgs.gov/research/external/reports/06HQAG0147.pdf. In 2009, we began the second phase of development, to combine the three early warning methods and prepare a prototype system. This project will benefit from the equipment upgrades being performed with ARRA funds.

6. References

Dreger, D. and A. Kaverina, Seismic remote sensing for the earthquake source process and nearsource strong shaking: A case study of the October 16, 1999 Hector Mine earthquake, *Geophys. Res. Lett., 27*, 1941-1944, 2000.

Dreger, D.S., L. Gee, P. Lombard, M.H. Murray, and B. Romanowicz, Rapid Finite-Source Analysis and Near-Fault Strong Ground Motions - Application to the 2003 M_w6.5 San Simeon and 2004 M_w6.0 Parkfield Earthquakes, Seismo. Res. Lett. 76, 40-48, 2005.

Ford, S.R., D.S. Dreger, and W.R. Walter, Identifying isotropic events using a regional moment tensor inversion, J. Geophys. Res., B01306, doi:10.1029/2008JB005743, 2009.

Gee, L., D. Neuhauser, D. Dreger, M. Pasyanos, B. Romanowicz, and R. Uhrhammer, The Rapid Earthquake Data Integration System, *Bull. Seis. Soc. Am., 86*, 936-945,1996.

Kanamori, H., P.Maechling, and E. Hauksson, Continuous monitoring or ground-motion parameters, *Bull. Seis. Soc. Am., 89*, 311-316, 1999.

McNamara, D.E. and R.P. Buland, Ambient Noise Levels in the Continental United States. *Bull. Seis. Soc. Am., 94*, 1517-1527.

Pasyanos, M., D. Dreger, and B. Romanowicz, Toward real-time estimation of regional moment tensors, *Bull. Seis. Soc. Am., 86*, 1255-1269, 1996.

Uhrhammer, R.A., S.J. Loper and B. Romanowicz, Determination of local magnitude using BDSN broadband records. *Bull Seis. Soc. Am. 86*, 1314 - 1330.

7. Reports Published

The following reports use data collected and archived under this project, but were not funded by it.

Allen, R.M., At First Jolt: Will we have warnings for the next big earthquake? *Geotimes/EARTH, 53(10)*, 52-59, 2008.

Allen, R.M., H. Brown, M. Hellweg, O. Khainovski, P. Lombard, D. Neuhauser, Real-time earthquake detection and hazard assessment by ElarmS across California, *Geophys. Res. Lett., 36* L00B08, doi:10.1029/2008GL036766, 2009.

Brenguier, F., M. Campillo, C. Hadziioannou, N.M. Shapiro, R.M. Nadeau, E. Larose, Postseismic relaxation along the San Andreas fault at Parkfield from continuous seismological observations, *Science, 321*, 1478-1481, 2008.

Ford, S.R., D.S. Dreger, K. Mayeda, W.R. Walter, L. Malagnini, and W.S. Phillips, Regional Attenuation in Northern California: A Comparison of Five 1-D Q Methods, *B. Seismol. Soc. Am., 98(4)*, doi:10.1785/0120070218, 2008.

Goltz, C., D.L. Turcotte, S.G. Abaimov, R.M. Nadeau, N. Uchida, T. Matsuzawa, Rescaled earthquake recurrence time statistics: application to microrepeaters, *Geophys. J. Int., 176*, 256-264, 2009.

Murphy, K.R., K. Mayeda, W.R. Walter, Coda spectral peaking for Nevada nuclear test site explosions, *Bull. Seismol. Soc. Am., 99*, doi: 10.1785/0120080046, 2009.

Nadeau, R.M. and A. Guilhem, Nonvolcanic Tremor Evolution and the San Simeon and Parkfield, California Earthquakes, *Science, 325*, 191-193, doi:10.1126/science.1174155, 2009.

Peng, Z., J. E. Vidale, A. G. Wech, R. M. Nadeau, and K. C. Creager, Remote triggering of tremor along the San Andreas Fault in central California, *J. Geophys. Res., 114*, B00A06, doi:10.1029/2008JB006049, 2009.

Rolandone, F., Bürgmann, R., Agnew, D.C., Johanson, I.A., Templeton, D.C., d'Alessio, M.A., Titus, S.J., DeMets, C., and Tikoff, B., Aseismic slip and fault-normal strain along the central creeping section of the San Andreas fault: *Geophys. Res. Lett., 35*, doi:10.1029/2008GL034437, 2008.

Romanowicz, B., P. McGill, D. Neuhauser and D. Dolenc, Acquiring real time data from the broadband ocean bottom seismic observatory in Monterey Bay (MOBB), *Seism. Res. Lett., 80*, 196- 204, 2009.

Shelly, D. R., W. L. Ellsworth, T. Ryberg, C. Haberland, G. S. Fuis, J. Murphy, R. M. Nadeau, and R. Bürgmann, Precise location of San Andreas Fault tremors near Cholame, CA using seismometer clusters: slip on the deep extension of the fault?, *Geophys. Res. Lett., 36*, doi:10.1029/2008GL036367, 2009.

Taira, T., P.G. Silver, F. Niu and R.M. Nadeau, Detecting seismogenic stress evolution and constraining fault-zone rheology in the San Andreas Fault following the 2004 Parkfield Earthquake, *J. Geophys. Res., 113*, B03303, doi:10.1029/2007JB005151, 2008.

Templeton, D., R.M. Nadeau R. Bürgmann, Behavior of Repeating Earthquake Sequences in Central California and the Implications for Subsurface Fault Creep, *Bull. Seism. Soc. Am., 98*, 52-65, 2008.

Templeton, D. C., R. M. Nadeau, and R. Bürgmann, Distribution of postseismic slip on the Calaveras fault, California, following the 1984 M6.2 Morgan Hill earthquake, *Earth and Planetary Science Letters, 277*, doi:10.1016/j.epsl.2008.1009.1024, 2009.

Allen, R.M., Earthquake hazard mitigation: New directions and opportunities, Treatise on Geophysics, G. Schubert (ed.), Vol 4 (H. Kanamori ed.), p607-648, Elsevier, 2007.

Dreger, D., R. Nadeau, and A. Chung, Repeating Earthquake Finite-Source Models: Strong Asperities Revealed on the San Andreas Fault, Geophys. Res. Lett., 34(L23302), doi:10.1029/2007GL031353, 2007.

Ford, S.R., D.S. Dreger, K. Mayeda, W.R. Walter, L. Malagnini, W.S. Phillips, Regional attenuation in northern California: A comparison of five 1-D methods, Bull. Seismol. Soc. Am., August, 2008.

Kim, A. and D. Dreger, Rupture Process of the 2004 Parkfield Earthquake from Near-Fault Seismic Waveform and Geodetic Records, J. Geophys. Res., 113(B07308), doi:10.1029/2007JB005115, 2008.

Taira, T., P.G. Silver, F. Niu, and R.M. Nadeau, Detecting seismogenic stress evolution and constraining fault-zone rheology in the San Andreas Fault following the 2004 Parkfield Earthquake, J. Geophys. Res., 113(B03303), doi:10.1029/2007JB005151, 2008.

Templeton, D., R.M. Nadeau R., and Bürgmann, Behavior of Repeating Earthquake Sequences in Central California and the Implications for Subsurface Fault Creep, Bull. Seism. Soc. Am., 98, 52-65, 2008.

Tsang, L., R.M. Allen, and G. Wurman, Magnitude scaling relations from P-waves in southern California, Geophys. Res. Lett., 34(L19304), doi:10.1029/2007GL031077, 2007.

Allen, R.M., The ElarmS earthquake early warning methodology and its application across California. In "Earthquake Early Warning Systems", P. Gasparini, G. Manfredi, J. Zschau (Eds), p. 21-44, Springer, ISBN-13 978-3-540-72240-3, 2007.

Chen, K. H., R. M. Nadeau, and R.-J. Rau (2007), Towards a universal rule on the recurrence interval scaling of repeating earthquakes?, Geophys. Res. Lett., 34, L16308, doi:10.1029/2007GL030554.

Dolenc, D., B. Romanowicz, R. Uhrhammer, P. McGill, D. Neuhauser, and D. Stakes, Identifying and removing noise from the Monterey ocean bottom broadband seismic station (MOBB) data, Geochem. Geophys. Geosys., 8, Q02005, doi:10.1029/2006GC001403, 2007.

Johnson, K. M., R. Bürgmann, and K. Larson (2006), Frictional properties on the San Andreas fault near Parkfield, California, inferred from models of afterslip following the 2004 earthquake, Bull. Seism. Soc. Am., 96, 321-338.

Malagnini, L., K. Mayeda, R. Uhrhammer, A. Akinci, and R.B. Herrmann, A regional ground motion excitation/attenuation model for the San Francisco region, Bull. Seism. Soc. Am., 97, 843-862, doi:10.1785/0120060101, 2007.

Rolandone, F., D. S. Dreger, M. H. Murray, and R. Bürgmann (2006), Coseismic Slip Distribution of the 2003 Mw 6.5 San Simeon earthquake, California, determined from GPS measurements and seismic waveform data, Geophys. Res. Lett., 33, doi:10.1029/2006GL027079.

Wurman, G., R.M. Allen and P. Lombard, Toward earthquake early warning in northern California, J. Geophys. Res. 112, B08311, doi:10.1029/2006JB004830, 2007.

8. Meeting Presentations Related to this Project

Nadeau, R.M. and A. Guilhem, Evidence for Laterally Distributed Tremor Activity Across the San Andreas Fault Zone at Cholame, CA. EarthScope Workshop on Aseismic Slip, Non-Volcanic Tremor, and Earthquakes, Sidney, British Columbia, February 25-28, 2008

Hellweg, M., Scaling and Complexity in small earthquakes. Workshop on Deformation Process and Earthquake Scaling, Hiroshima University, Hiroshima, Japan, March 3-4, 2008

Cua, G., P. Maechling, R.M. Allen, E. Hauksson, T. Heaton, P. Hellweg, A. Kireev, D. Neuhauser, K. Solanki, S. Wiemer, J.Woessner, and M. Zeleznik, Comparison and testing of earthquake early warning algorithm performance. European Geophysical Union Meeting, April 2008.

Chung, A.I., D.S. Dreger, and R.M. Nadeau, Kinematic Source Parameters and Scaling of Micro-Repeating Earthquakes at Parkfield, Seism. Res. Lett., 79, 357, 2008.

Dolenc, D., R. Uhrhammer, and B. Romanowicz, Analysis of long-period noise at the Farallon Islands broadband seismic station FARB, Seism. Res. Lett., 79, 293, 2008.

Hellweg, M, A. Chung, D. Dreger, A. Kim, and J. Boatwright, Mapping the rupture of the MW 5.4 Alum Rock earthquake. Seism. Res. Lett. 79, 353, 2008.

Hellweg, M., R.A. Uhrhammer, S. Ford, and J. Friday, Nonvolcanic tremor in Denali surface waves at broadband stations in Northern California: Instrumental causes? Seism. Res. Lett., 79, 327, 2008.

Nadeau, R.M. and A. Guilhem, Evidence for Laterally distributed Tremor Activity across the San Andreas Fault Zone at Cholame CA, Seism. Res. Lett., 79, 291, 2008.

Oppenheimer, D., W. Bakun, R. Uhrhammer, J. Boatwright, and R. Simpson, Seismicity on the central and southern Calaveras fault and earthquake forecasts; Part 1 1910-present, Seism. Res. Lett., 79, 342-343, 2008.

Shelly, D.R., R.M. Nadeau, R. Burgmann, W.L. Ellsworth, J.M. Murray, T.F. Ryberg and C. Haberland, Repeating Nature and Relative Location of San Andreas Fault Tremors near Cholame, CA, Seism. Res. Lett., 79, 291, 2008.

Allen, R., M. Bose, H. Brown, G. Cua, D. Given, E. Hauksson, T. Heaton, M. Hellweg, T. Jordan, A. Kireev, P. Maechling, D. Neuhauser, D. Oppenheimer, K. Solanki, and M. Zeleznik, Rapid telemetry and earthquake early warning, Eos Trans. AGU, 89(23), Jt. Assem. Suppl., Abstract G21A-01, 2008.

Guilhem, A. and R.M. Nadeau, Influence of large earthquakes on the nonvolcanic tremor activity in the Parkfield-Cholame region , CA. IRIS Annual Workshop, Stevenson, WA, June 4-6, 2008

Taira, T., P.G. Silver, F. Niu, and R.M. Nadeau, Dynamically-induced weakening of the San Andreas Fault by the 2004 Sumatra-Andaman earthquake. IRIS Annual Workshop, Stevenson, WA, June 4-6, 2008

Shelly, D.R., R.M. Nadeau, R. Burgmann, W.L. Ellsworth, J. Murphy, T.F. Ryberg, C. Haberland, and G. Fuis, Repeating Nature and Relative Location of San Andreas Fault Tremors Near Cholame, CA. IRIS Annual Workshop, Stevenson, WA, June 4-6, 2008

Allen, R.M., M. Obrebski, F. Pollitz, M. Xue, S.-H. Hung, Plume vs. plate: Imaging geological interactions beneath North America, Seism. Res. Lett., 80(2), 360, 2009 (invited).

Chen, K.H., R. Burgmann and R.M. Nadeau, Quantifying the Interaction Between Small Repeating Earthquake Sequences, Seism. Res. Lett., 80(2), 377, 2009.

Dreger, D.S., R.M. Nadeau, and A. Chung, Finite-Source Models and Scaling of Parkfield Seismicity, Seism. Res. Lett., 80(2), 336, 2009.

Guilhem, A. and D.S. Dreger, Continuous seismic scanning in the region of the Mendocino Triple Junction, California, Seism. Res. Lett., 80(2), 344, 2009.

Johanson I.A. and R. B¨urgmann, Complex Rupture During and After the 2003 San Simeon Earthquake Determined from Multiple SAR Interferograms, Seism. Res. Lett., 80(2), 324, 2009.

Nadeau, R.M. and A. Guilhem, Evolution of Non-Volcanic Tremor Beneath the San Andreas Fault at Monarch Peak, CA, Seism. Res. Lett., 80(2), 362, 2009.

Zechar, J.D. and R.M. Nadeau, Predictability Experiments with Repeating Microearthquakes, Seism. Res. Lett., 80, 377, 2009.

Johanson I.A., R. Burgmann, A. Ferretti and F. Novali, Time-Dependent Deformation in the Eastern San Francisco Bay Area from InSAR Permanent Scatterers, SBAS and GPS EarthScope Annual Meeting, Boise, Idaho, May 12-15, 2009

9. Data Availablility

Data and results from the NCEMC project are available at the Northern California Earthquake Data Center (http://www.ncedc.org). For additional information on the NCEMC project, contact Margaret Hellweg at 510-643-9449 or peggy@seismo.berkeley.edu.