U.S. Department of Veterans Affairs
San Juan, Puerto Rico - Reinforced Concrete, Two-Story Hospital Building
Building No: 10
NSMP Station No: 3096

Revision Number: 7
Revised on 2/21/2013

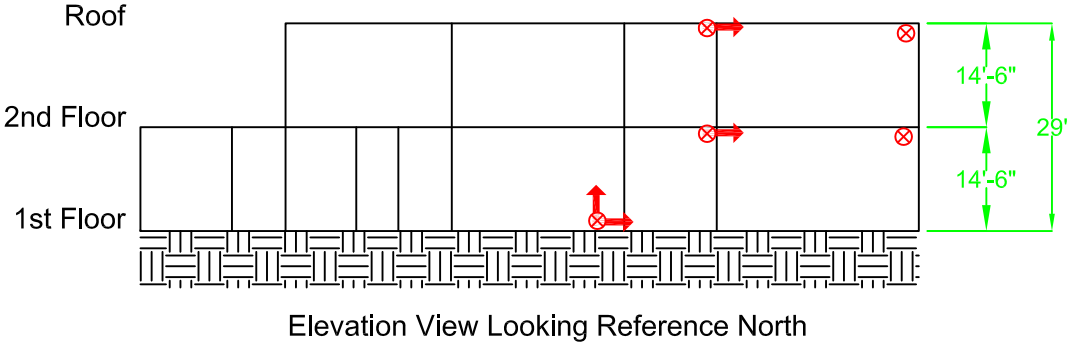

Elevation View Looking Reference North

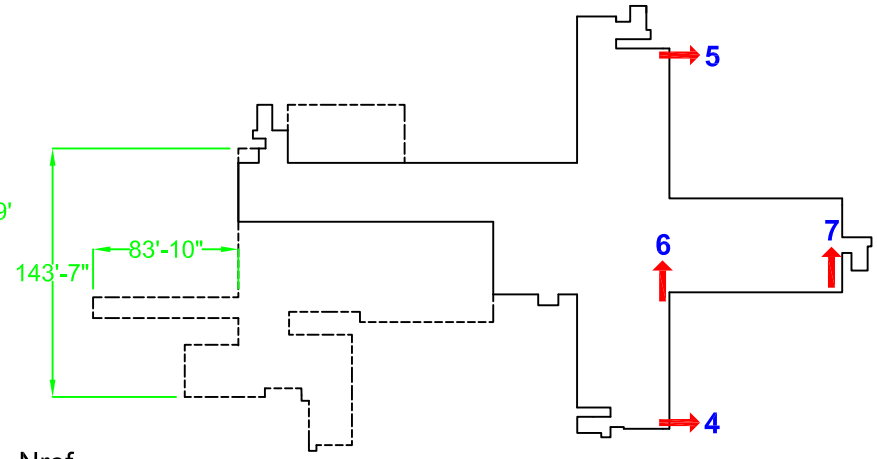

Second Floor

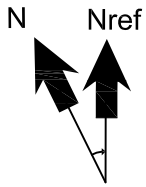

Structure Reference
Orientation: 35°

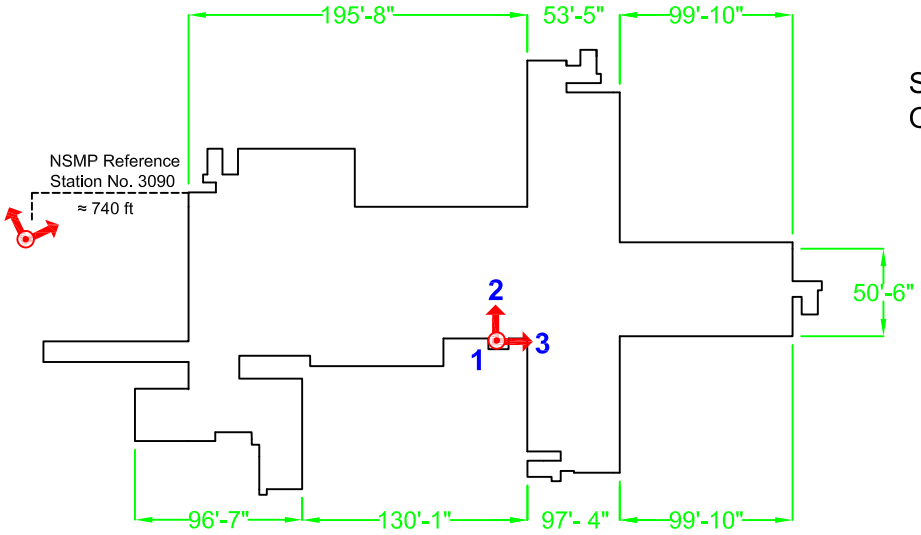

First Floor

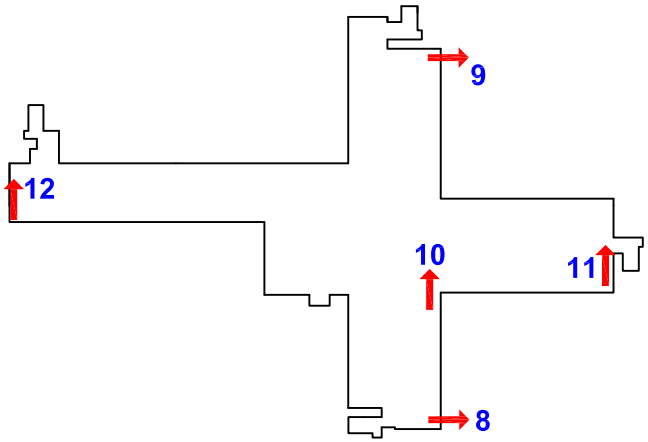

Roof

Structural and architectural drawings, and soil report may be available upon request. (E-mail:nsmp@usgs.gov)

USGS science for a changing world | NSMP | ANSS | Department of Veterans Affairs

SENSOR LOCATIONS